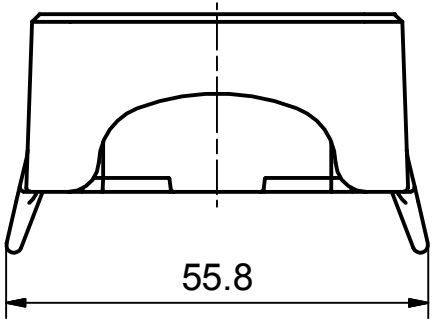
55.8

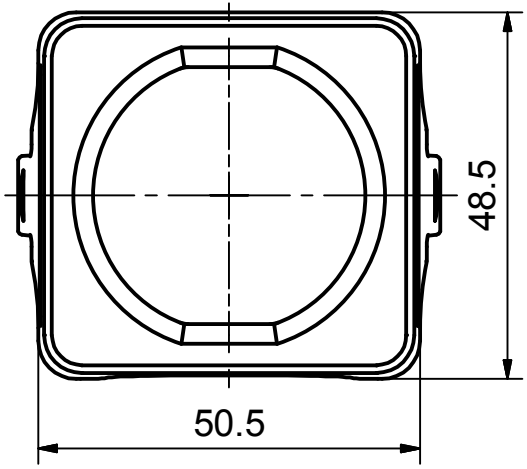
48.5
50.5

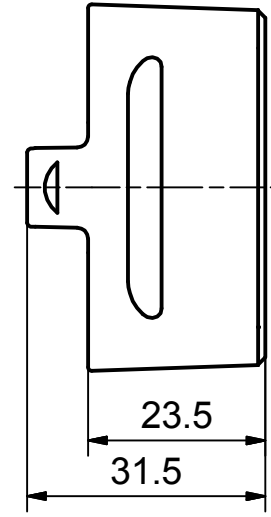
23.5
31.5